Bi-telecentric lens 0.08x

Bi-telezentrisches Objektiv 0,08x

Objectif bi-télécentrique 0,08x

Specification

Article number 100-BTC-008		
Bi-telecentric		object and image side
Magnification	mm	0.08 x
Field of View (with 1/2" chip)	mm	79 x 59.2
Field of View (with 1/1.8" chip)	mm	88 x 65
Field of View (with 2/3" chip)	mm	105 x 79 (slightly vignetting possible)
Distortion	%	< 0.07
Telecentric failure	°	< 0.08
Resolution (MTF@70LP/mm)	%	50
Aperture	F/#	8
Depth of focus	mm	101
Working Distance	mm	255.57
Diameter x length	mm	141 x 346
Clamp diameter	mm	63
Clamp length	mm	54.5
Camera thread		C-Mount

02/2015 - Specifications are subject to change without prior notice.

Opto GmbH · Lochhamer Schlag 14 · 82166 Gräfelfing · Germany · Tel: +49 89 8980 55 0 · info@opto.de
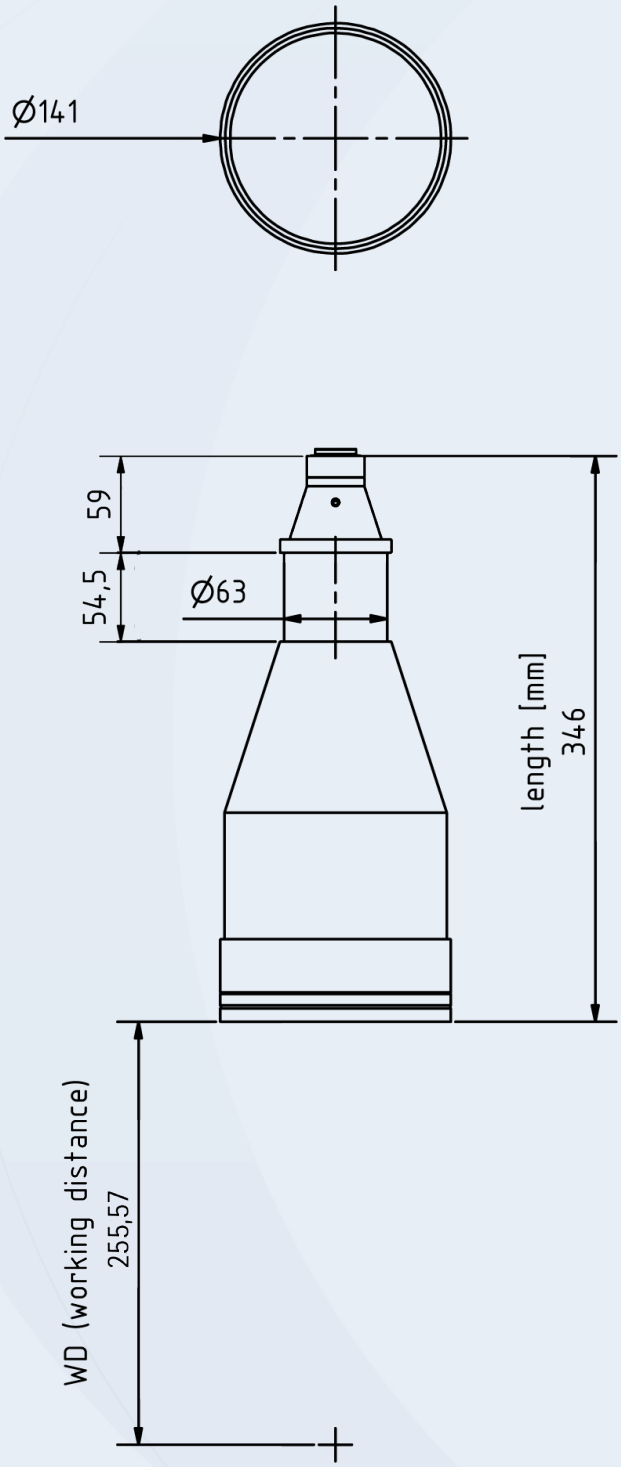
Technical Drawing / clamp dimensions