REVISIONS			
REV.	DESCRIPTION	DATE	DCN NO

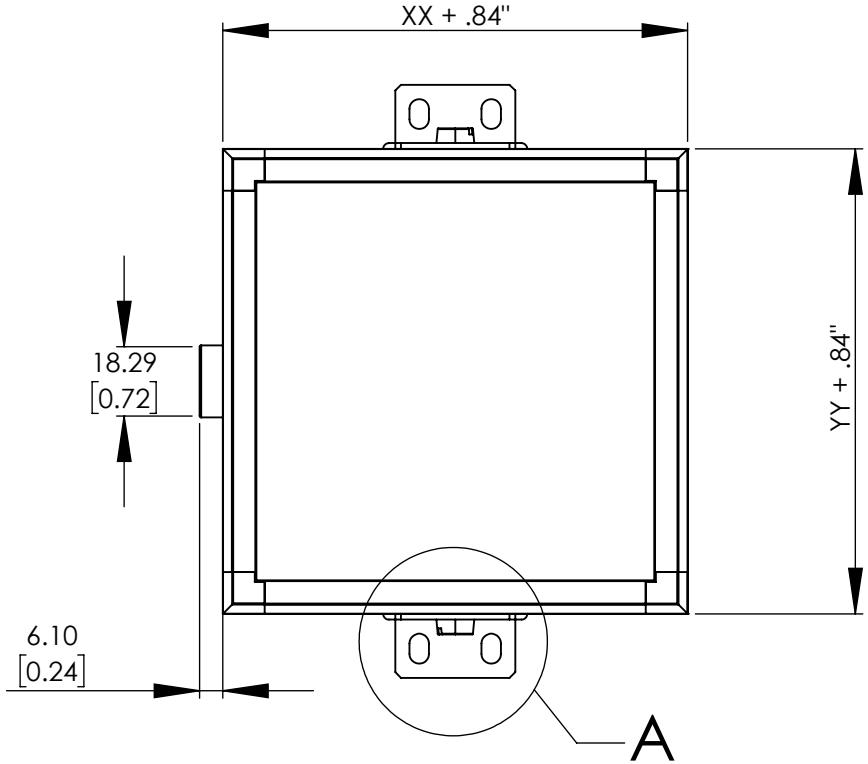

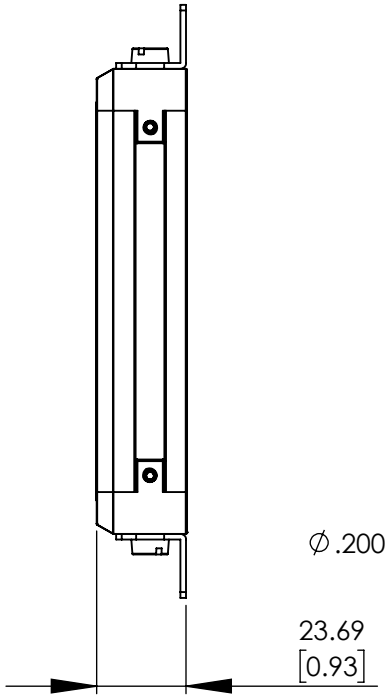

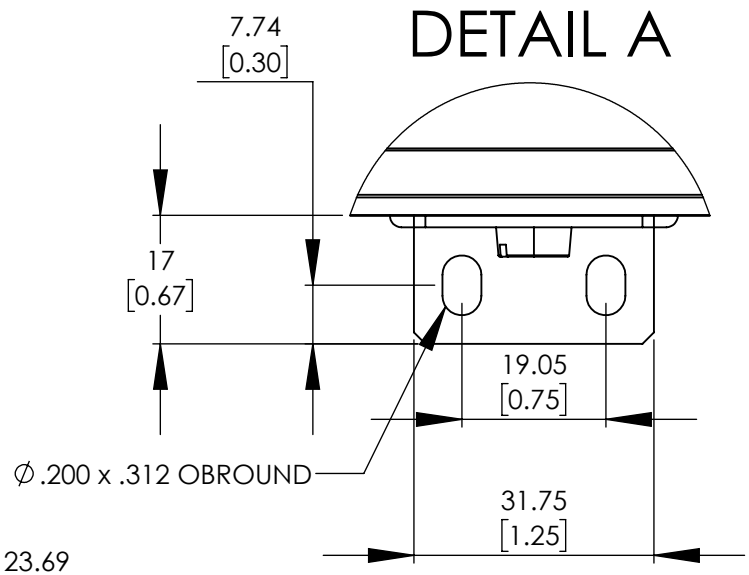

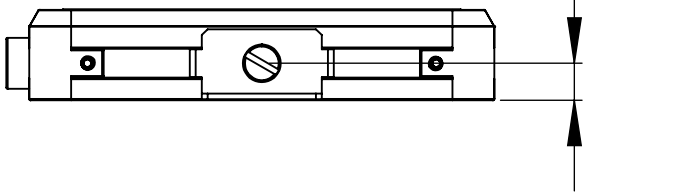

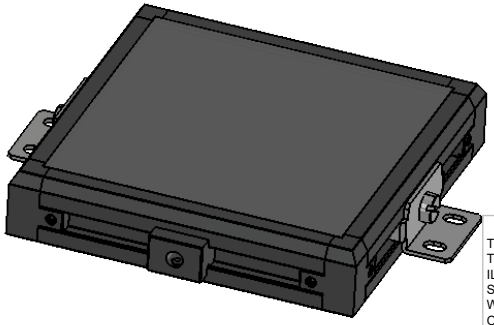

FOR REFERENCE ONLY

PROPRIETARY AND CONFIDENTIAL

THESE DRAWINGS AND SPECIFICATIONS ARE THE EXCLUSIVE PROPERTIES OF ADVANCED ILLUMINATION INCORPORATED ISSUED IN STRICT CONFIDENCE AND SHALL NOT, WITHOUT THE PRIOR WRITTEN PERMISSION OF ADVANCED ILLUMINATION INC BE REPRODUCED, COPIED OR USED FOR ANY PURPOSE WHATSOEVER EXCEPT THE MANUFACTURE OF ARTICLES FOR ADVANCED ILLUMINATION INC

NEXT ASSY	USED ON
APPLICATION	

UNLESS OTHERWISE SPECIFIED:

SURFACE SHOULD BE FREE OF SCRATCHES, BURRS, AND DENTS

DIMENSIONS ARE IN: INCHES

TOLERANCES

FRACTIONAL ± 1/16
ANGULAR: MACH ± 1 BEND ± 1
TWO PLACE DECIMAL ± .010
THREE PLACE DECIMAL ± .005

MAKE FROM
--

	DATE	NAME
DRAWN	--	--
CHECKED	--	--
APPROVED	--	--

MATERIAL
--

FINISH
--

ADVANCED ILLUMINATION
24 PEAVINE DRIVE, ROCHESTER, VERMONT 05767

TITLE:
DRAWING, INSTALLATION, BLXXYY

SIZE	DWG. NO.	REV
A	BLXXYY	-

SCALE: NTS | C CODE: | SHEET 1 OF 1

1160.050006 REV-