LineX CHVS Series CIS



01 Product Model

INS-CHVS-550-10GM-BB

CIS line-scan camera · Monochrome · 10GigE port · Integrated design

02 Typical Applications

Battery separator surface inspection; electrode sheet surface inspection; print inspection; print guidance and positioning; fabric inspection; electronic component inspection; display surface inspection; wood surface inspection; leather surface inspection; and other applications.

03 Key Features

- All-in-one design integrating the camera, light source, and lens
- 1:1 imaging without distortion from conventional lenses
- Short working distance for use in confined spaces
- Multiple scan widths available, with no multi-camera image stitching required
- 10GigE copper Ethernet interface supporting transmission distances of up to 30 m
- Compliant with the GigE Vision V2.0 standard
- Supports Windows 7/10 (32-bit and 64-bit), Windows 11 (64-bit), and Linux (64-bit)
- Provides SDK libraries for C, C++, and C#
- InsWorks ACI image acquisition software for CIS cameras

04 Standard BOM

- 10GigE dual-port frame grabber: INS-FG-EXGV2-S-2, 1 pc.
- Cable (5 m power cable), straight connector: INS-WIRE-M16-A-S4-5M, 1 pc.
- Cable (5 m trigger input cable), straight connector: INS-WIRE-M12-A1-S8-5M-PUR, 1 pc.
- Cable (5 m Ethernet cable), straight connector: INS-WIRE-LKK-10GE-S-RJ45-RJ45-H-05, 1 pc.
- Calibration target: INS-CHVS-550-10GM-BD, 1 pc.

NOTE: Optional accessories can be ordered separately based on the application. Contact your sales engineer or technical support for model and specification details.

Parameter Category	Parameter	Value
Performance Specifications	Sensor Type	CMOS
	Field of View	550 mm
	Image Mode	Monochrome
	Resolution (μm/pixel)	42μm
	Resolution (DPI)	600DPI
	Pixels per Line	13087
	Maximum Line Rate	66kHz
	Transmission Interface	10GigE
	Dynamic Range	56 dB
	Signal-to-Noise Ratio	44.2 dB
	Working Distance	15 mm
	Depth of Field (DOF)	±1.3mm
	Gain	1.0 x
	Exposure Time	15 μs ~ 21 s
Functional Specifications	Shutter Mode	Auto Exposure
	Pixel Format	Mono 8
	Image Flip	Supports horizontal flip
	Trigger Mode	External trigger, internal trigger
	External Trigger Mode	Line trigger, frame trigger, hybrid trigger
Electrical Specifications	Data Interface	10GigE*1
	Digital I/O Connectors	CAM_PWR: 4-pin camera power connector; I/O: 8-pin M12 signal connector
	Supply Voltage	Camera: 24 VDC; light source: 24 VDC
	Typical Power Consumption	Camera: 48 W @ 24 VDC; light source (continuous illumination): 72 W @ 24 VDC
Mechanical Specifications	Dimensions	Including light source: 630 mm × 90 mm × 106.2 mm (camera body dimensions exclude the focus adjustment mechanism and connector length)
	Weight	Approx. 5.2 kg
	Ingress Protection Rating	IP54 (with the lens and cables properly installed)
	Operating Temperature	0~40°C
	Storage Temperature	-30~80°C
	Operating Humidity	5%–90% RH, non-condensing
General Specifications	Software	InsWorks ACI
	Supported Operating Systems	Windows 7/10 (32-bit and 64-bit), Windows 11 (64-bit), and Linux (64-bit)
	Communication Protocol	GigE Vision 2.0
	Certifications	CE、FCC、 RoHS

Dimensions

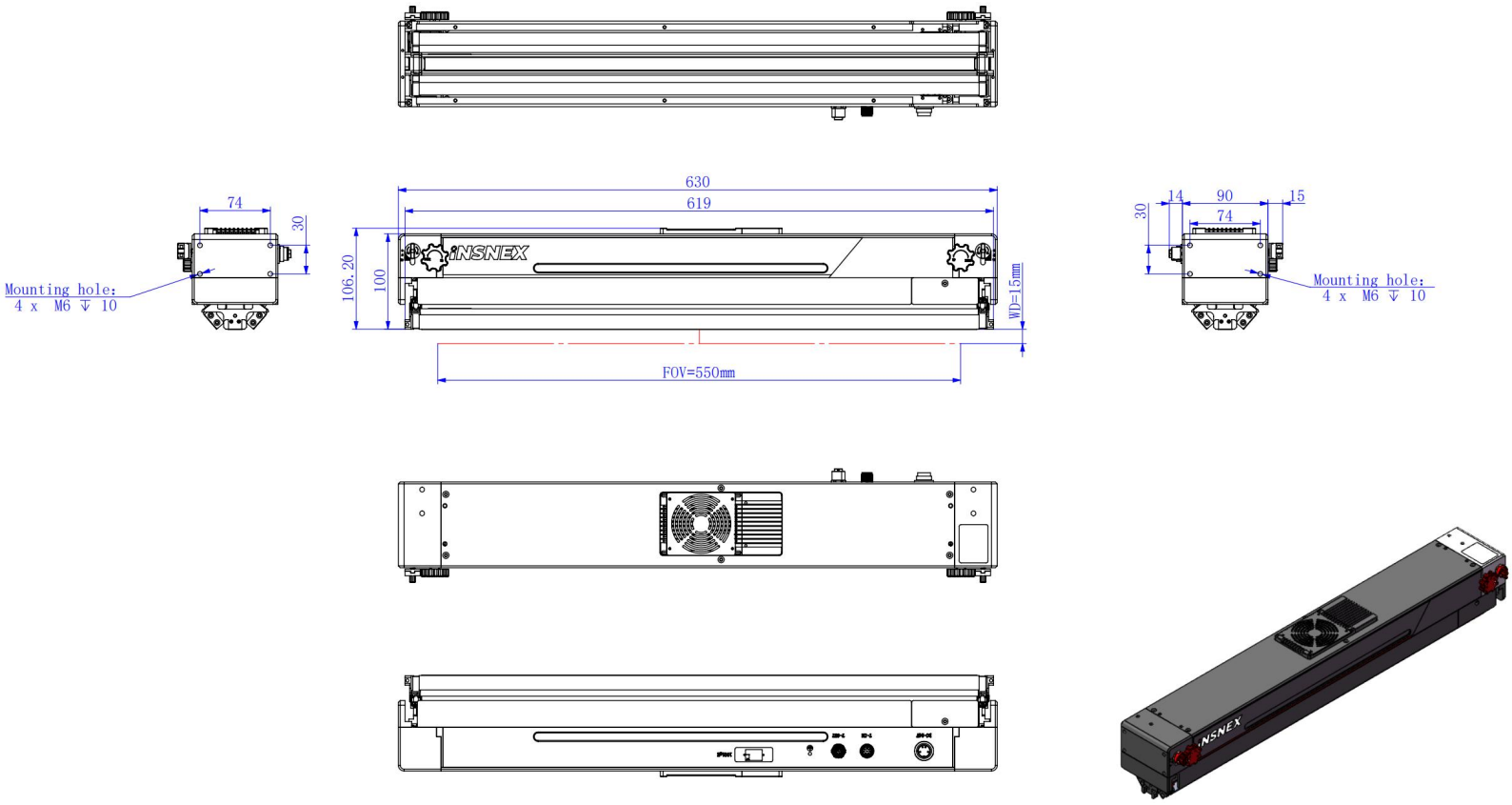

CONTACT US

Insnex Technologies Co.,Ltd

Address: Building R, No. 218 Xingming Street, Suzhou Industrial Park, Suzhou Area, China (Jiangsu) Pilot Free Trade Zone

Postal Code: 215000

Website: http://www.insnex.com/

Telephone: (86) 0512-67159489

E-mail: Services@Insnex.com