Kamerakabel-TLi Basler ace/USB3.0

Artikel-Nr.: 00214.00

Leitung 4x0,22, schwarz
Kabelfronik 095042409
Länge 200mm Mantel zischen den Steckern

Kabelmarkierung einseitig:
00214.00

Pin2 nicht aufgelegt

Hirose Stecker 6pol.
HR10A-7P-6S

1	GPIO	bk	2
2	I/O Input 1	bn	4
3	nc		
4	I/O Out 1	rd	3
5	I/O Ground		
6	GPIO Ground	oe	1

Steckbare Schraubklemme 4Pol RM3,81
Teile-Nr. MC 1,5/4-ST-3,81

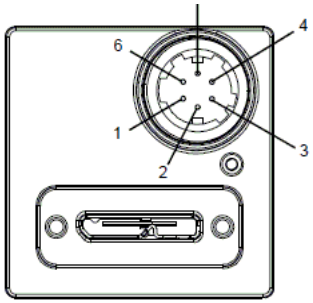

Fig. 30: Pin Numbering for the 6-pin Connector

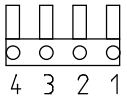

Auf die Schraubklemmen gesehen

The pin assignments and designations for the 6-pin connector are shown in Table 7.

Pin	Designation	Function
1	Line 3	Direct-coupled General Purpose I/O (GPIO)
2	Line 1	Opto-isolated I/O IN
3	Line 4	Direct-coupled General Purpose I/O (GPIO)
4	Line 2	Opto-isolated I/O OUT
5	-	Ground for opto-isolated I/O
6	-	Ground for direct-coupled GPIO

Table 7: Pin Assignments for the 6-pin Connector and Related Designations

previous page:							supplier	project description	page description	next page:		
status	changes	date	name	project	date	name	MBJ	Kamerakabel-TLi Basler ace/USB3.0		proj.-no.:	equipm.:	
		04.09.2014		name	06.02.2014	V.Bie				00214.00 Kamerakabel-TLi Basler ace-USB3	location:	
				checked						drawing.-no.:	page:	1
				guidline				Ers.f	Ers.d		of	1